Montageanleitung - Assembly instruction

Quickship QS – **SL**

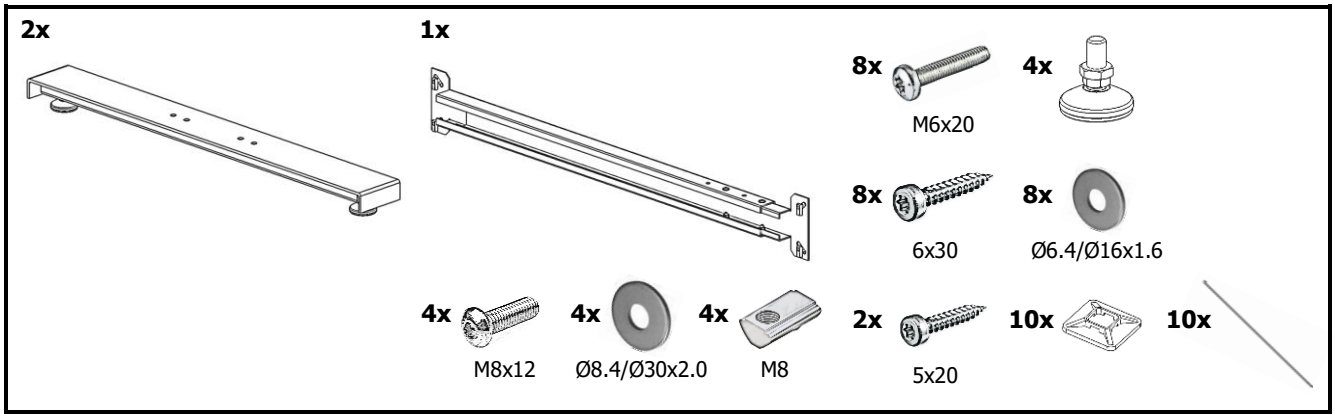

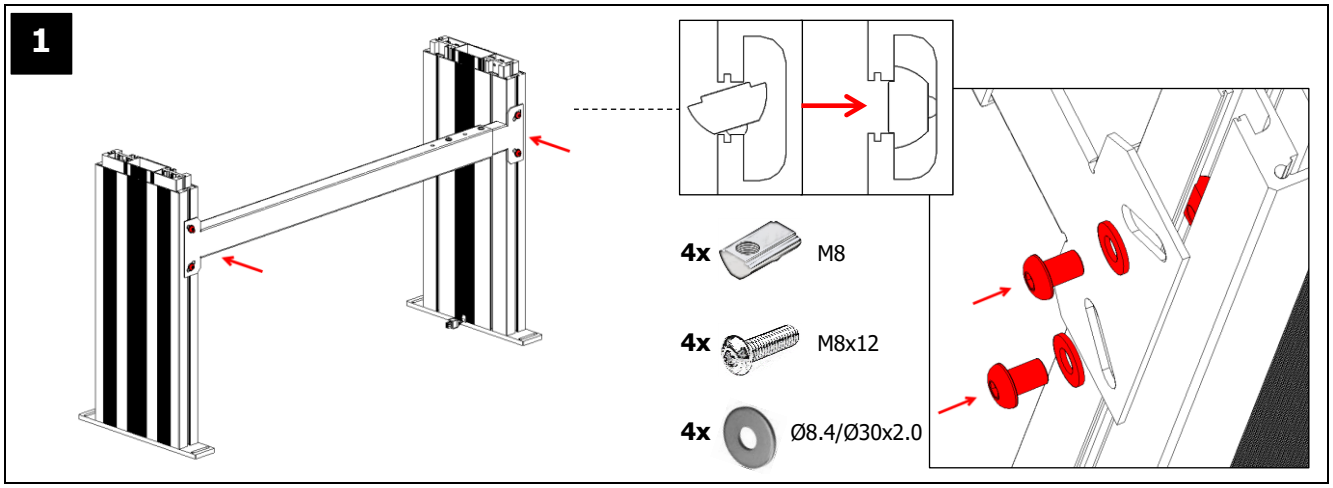

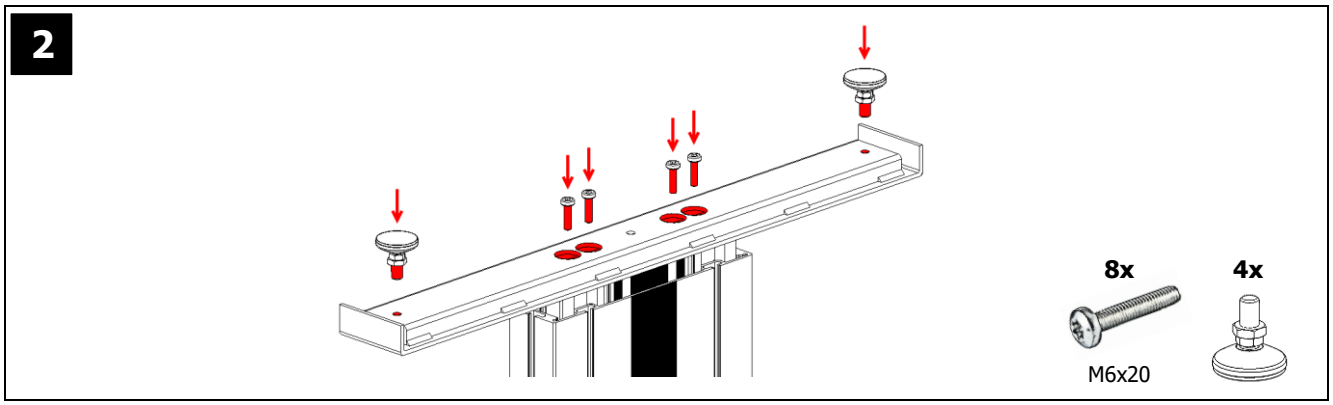

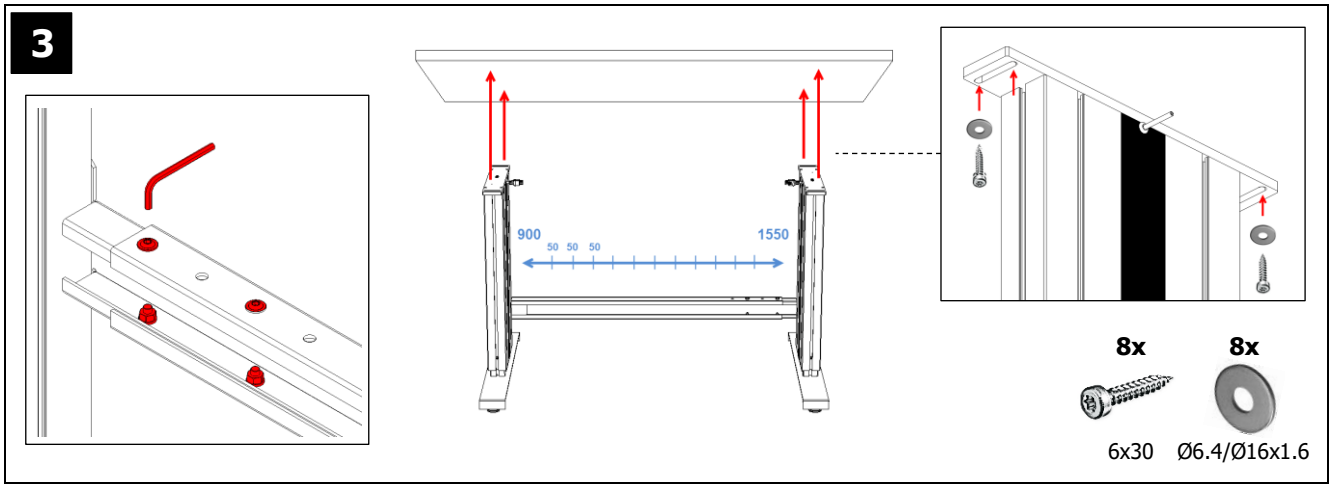

Montageanleitung - Assembly instruction
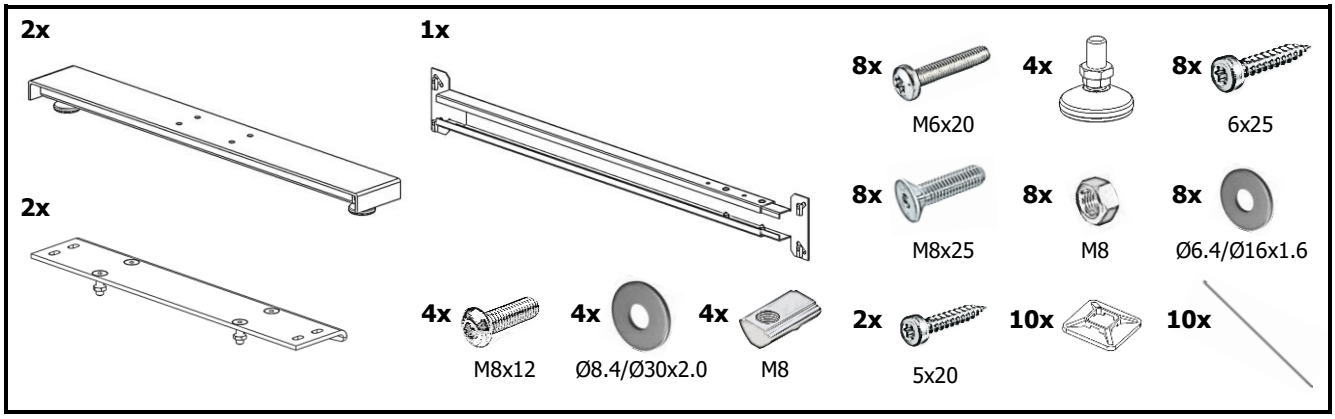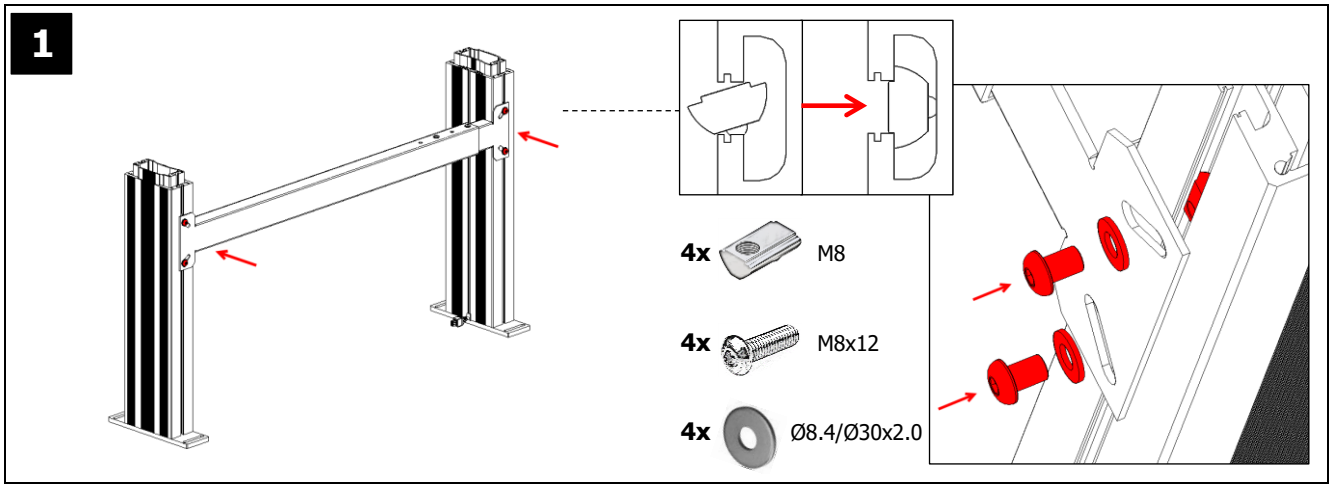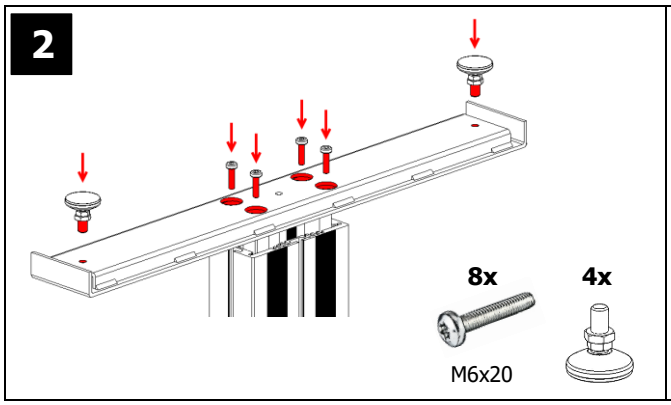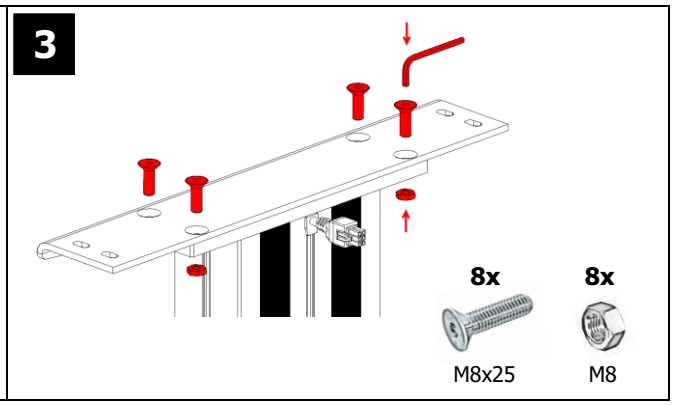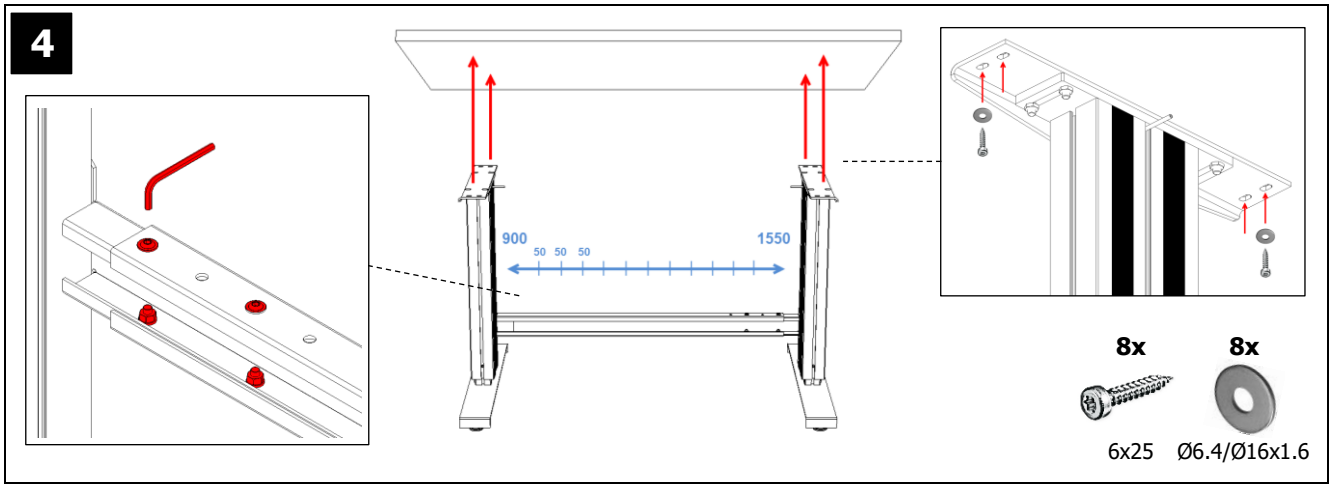
Quickship QS – **SM**