ERGOSWISS table lift systems

QS – SL

Montageanleitung
Assembly instruction
Instruction de montage

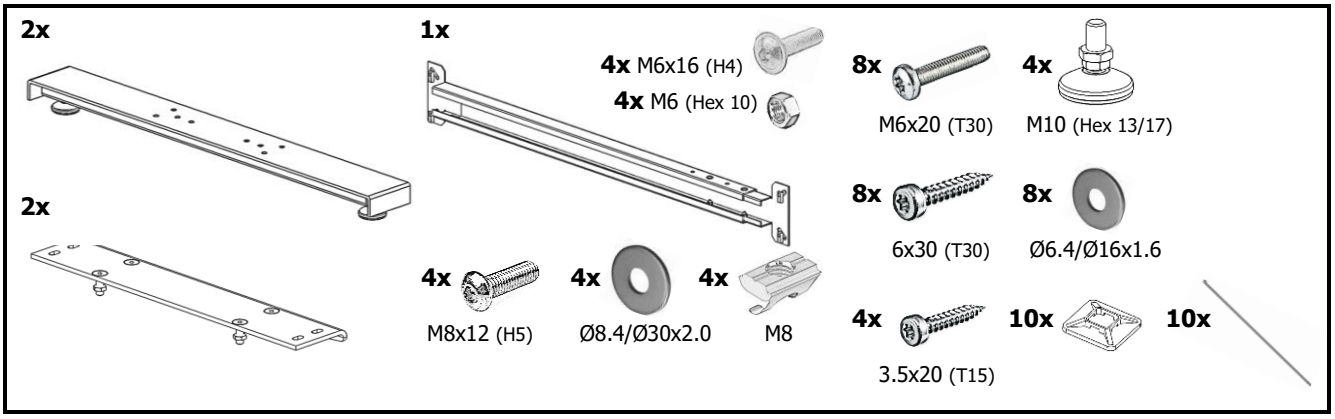

1

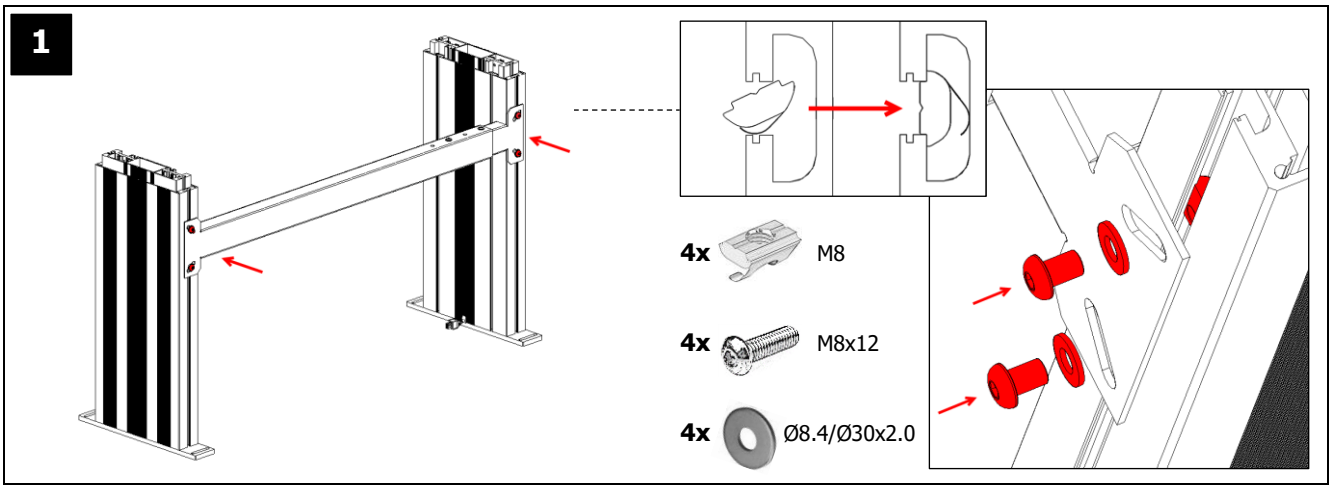

2

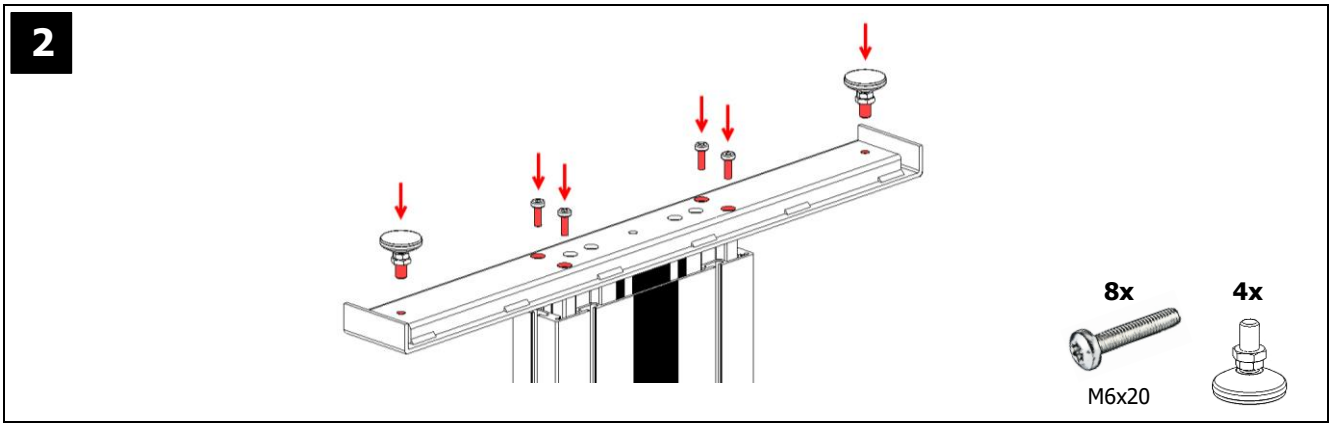

3

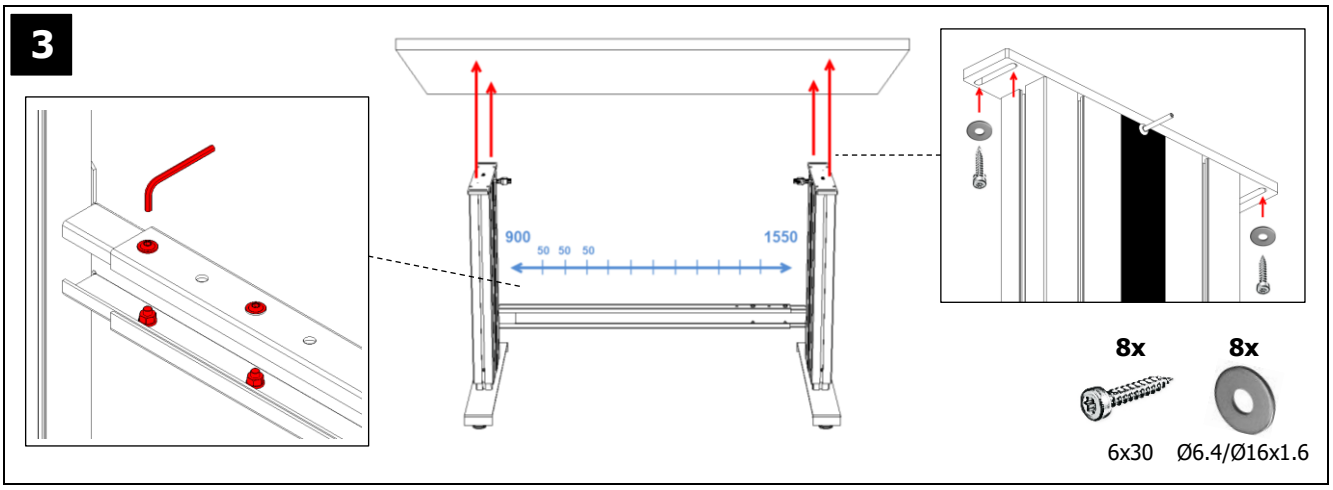

ERGOSWISS table lift systems

QS – SM
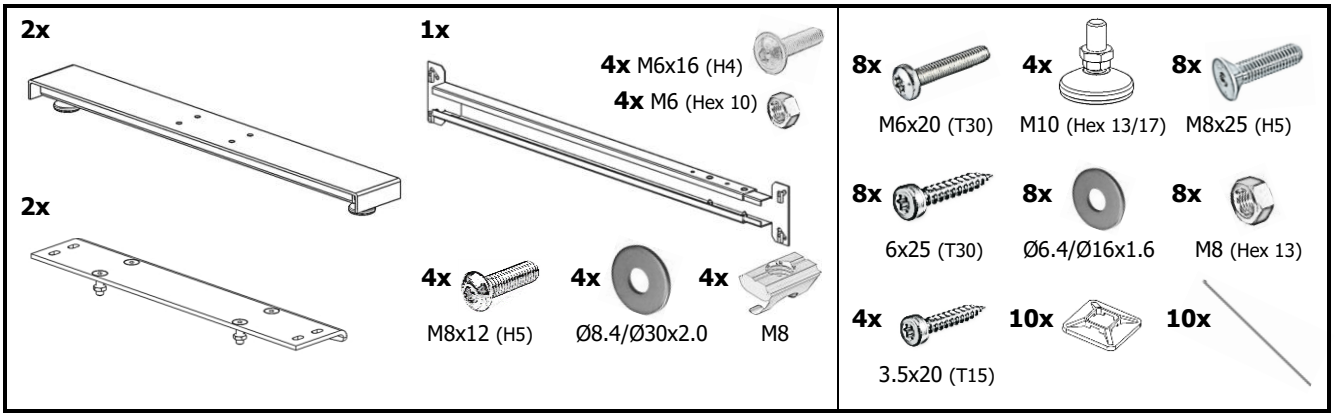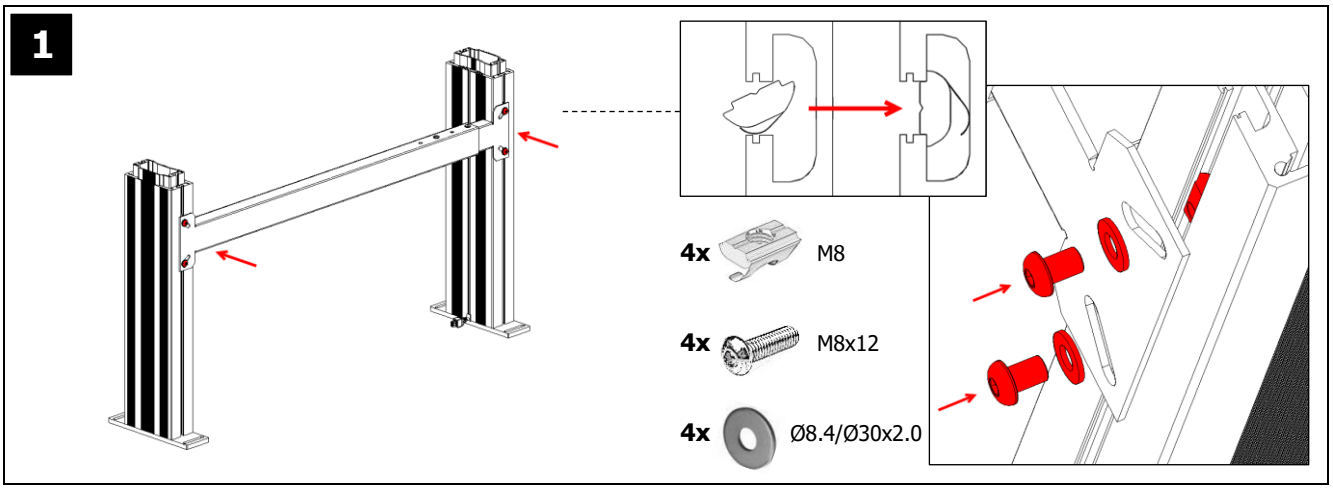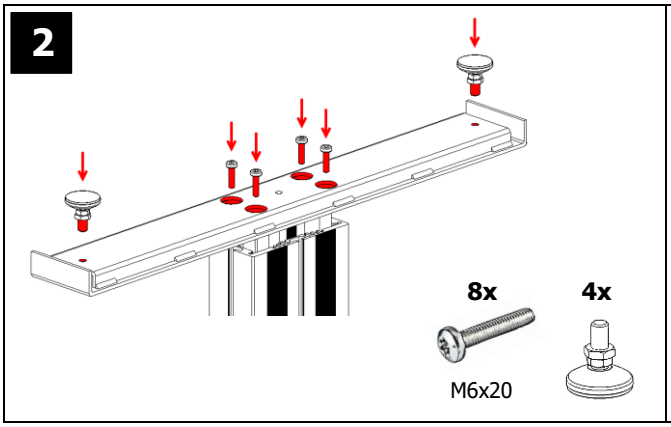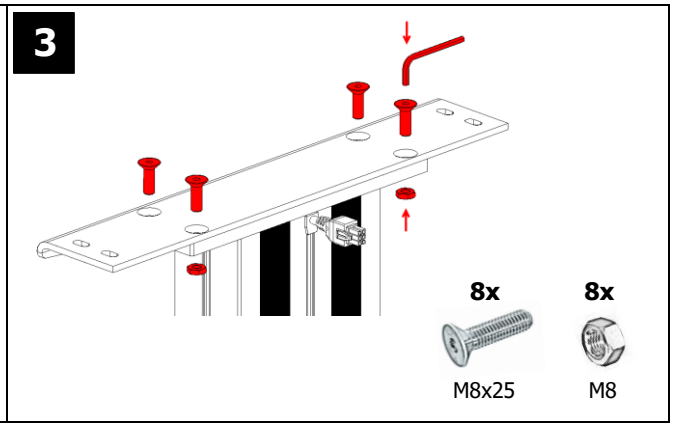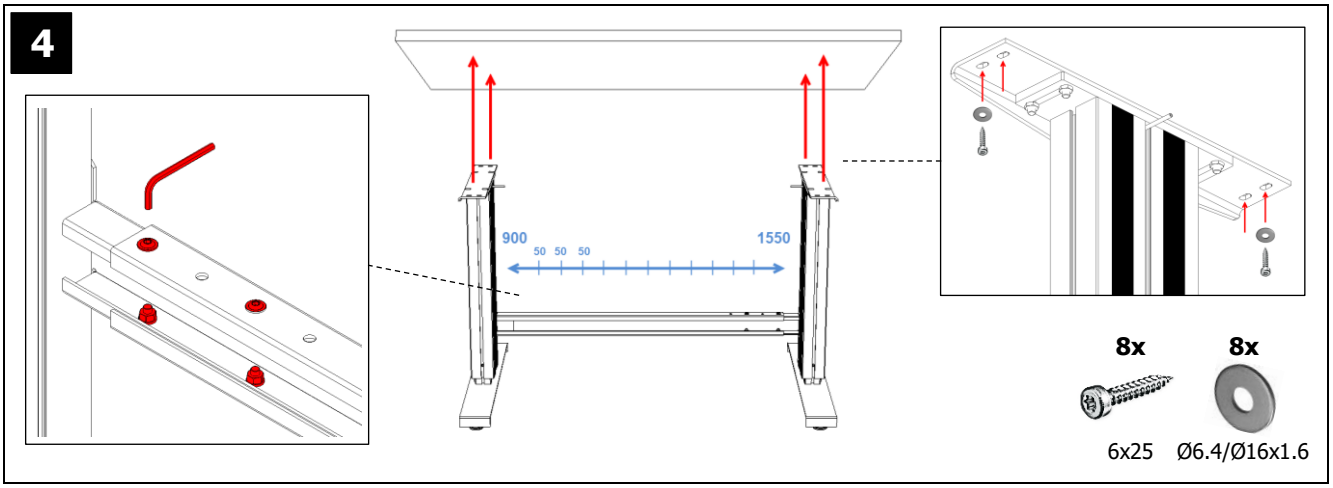
Montageanleitung
Assembly instruction
Instruction de montage